Metro 130XT/2 Rechts RCH

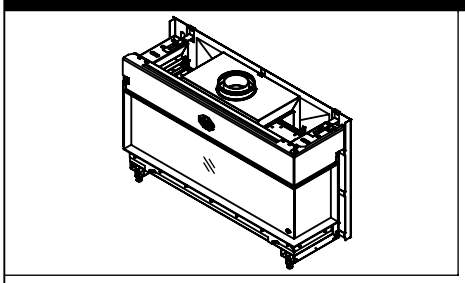

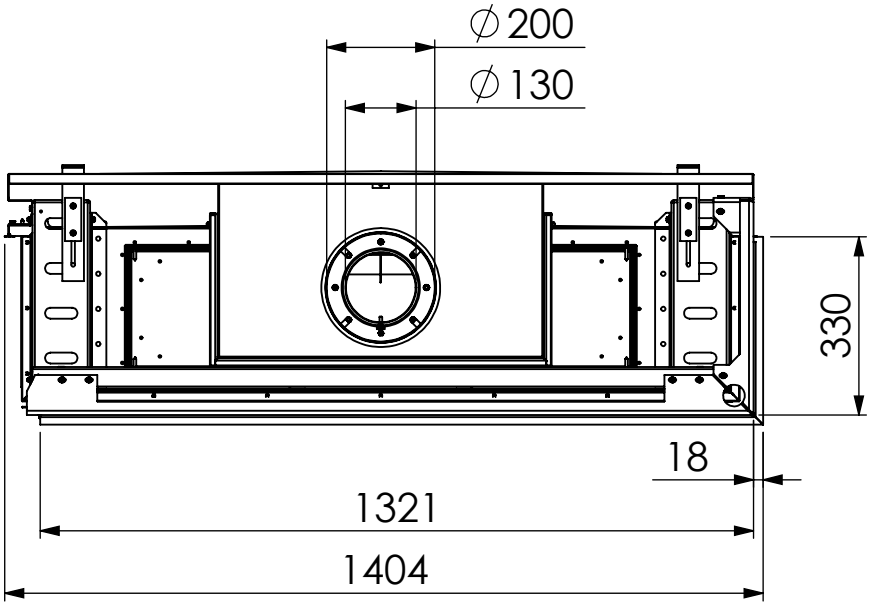

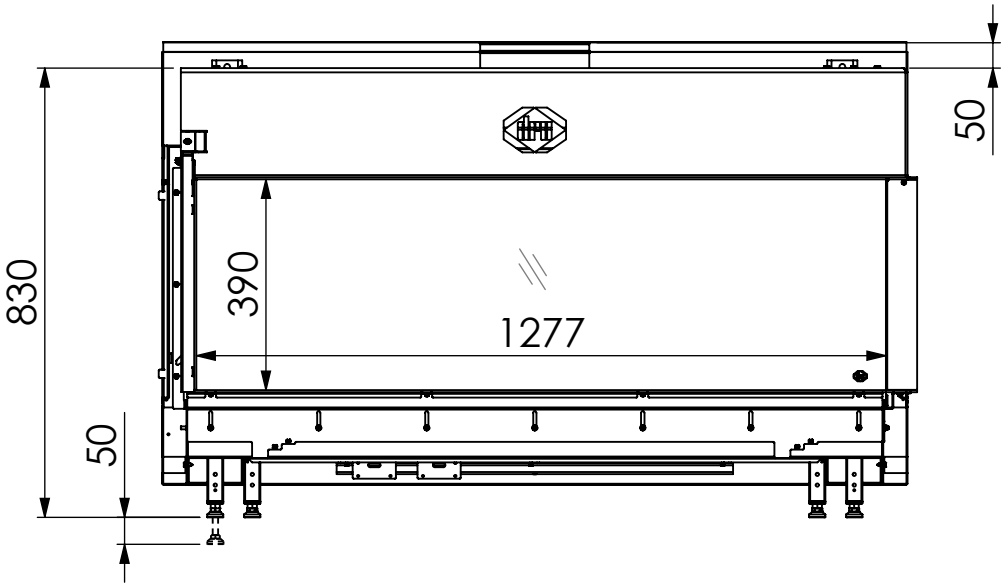

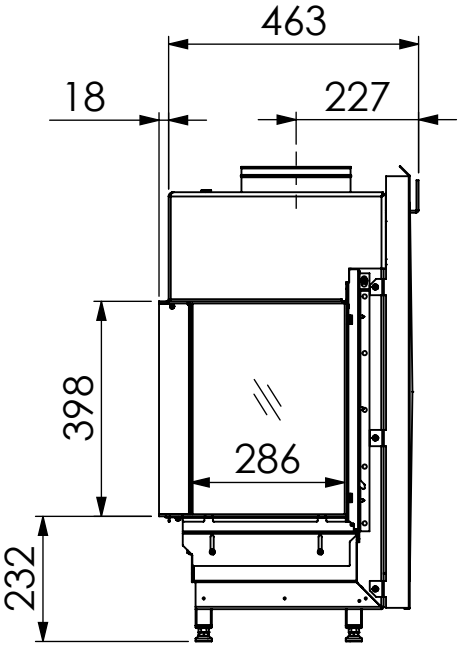

38C-2028/01

Metro 130XT/2 Rechts RCH

6S B=100 (64)

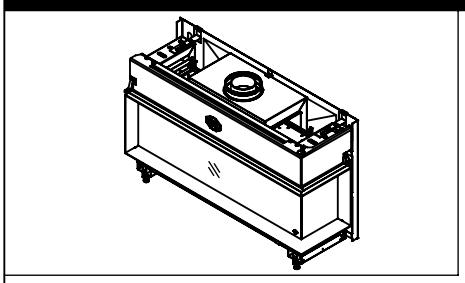

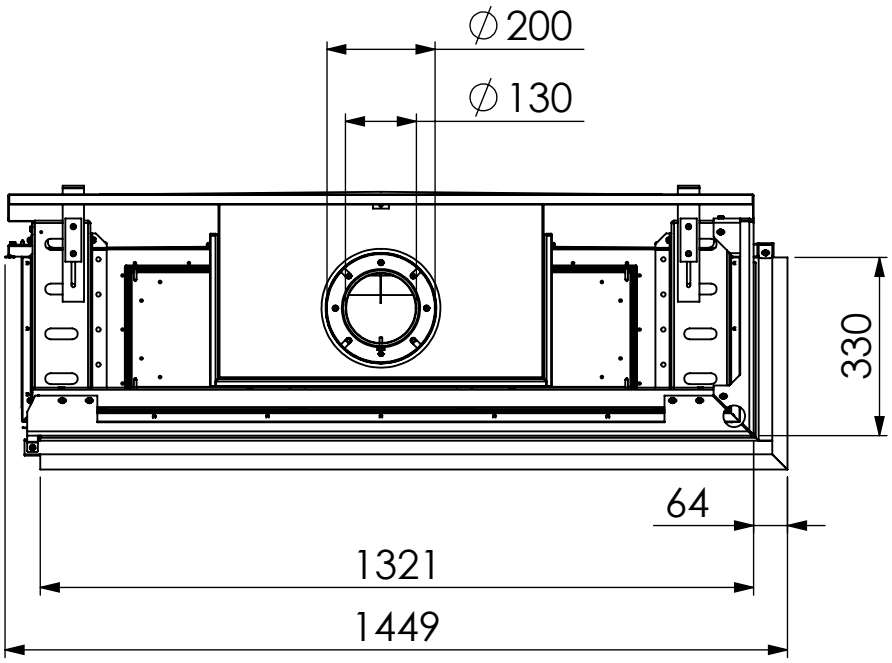

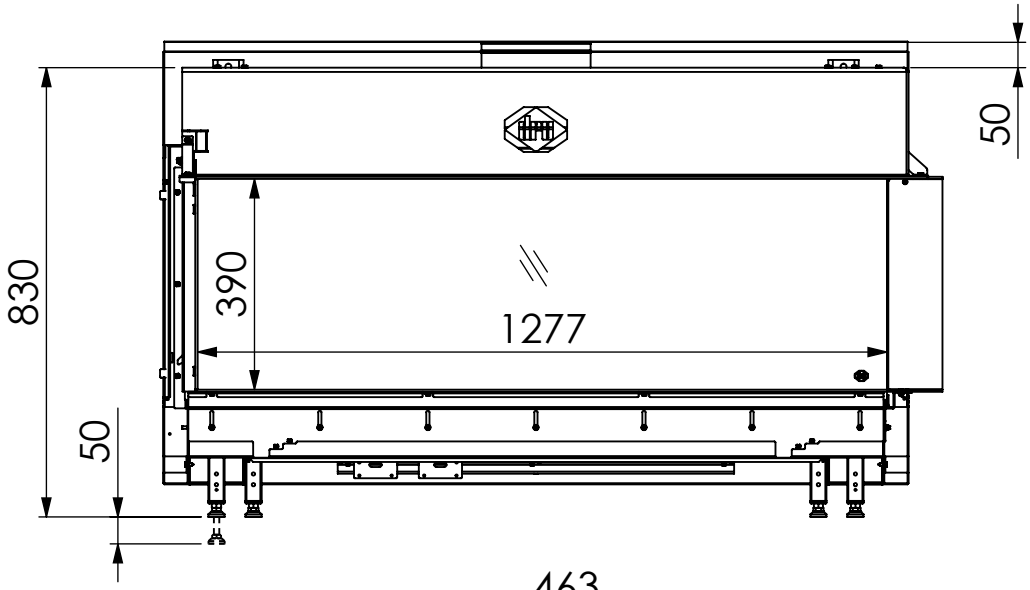

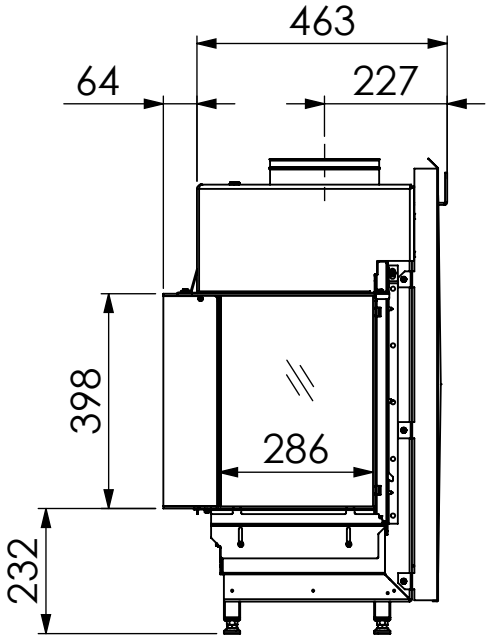

38C-2028/01

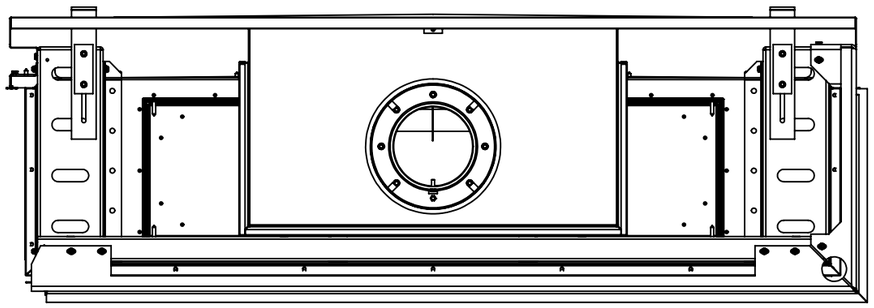

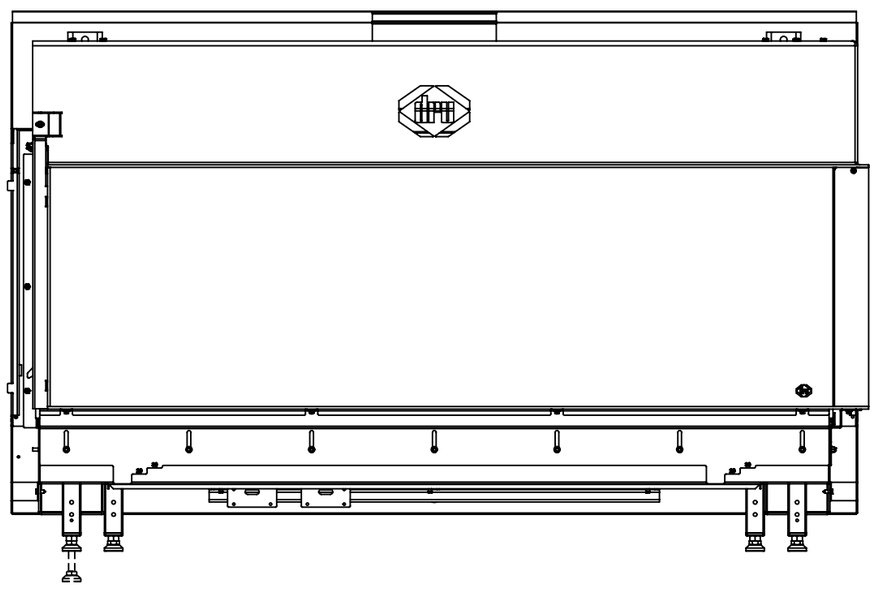

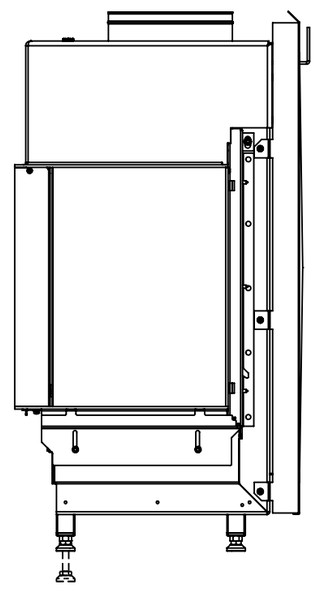

Sheet size: A3

Scale: 1:10

Metro 130XT/2 Links RCH

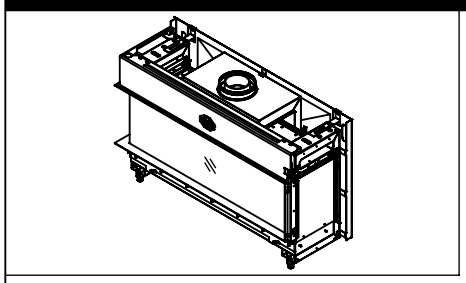

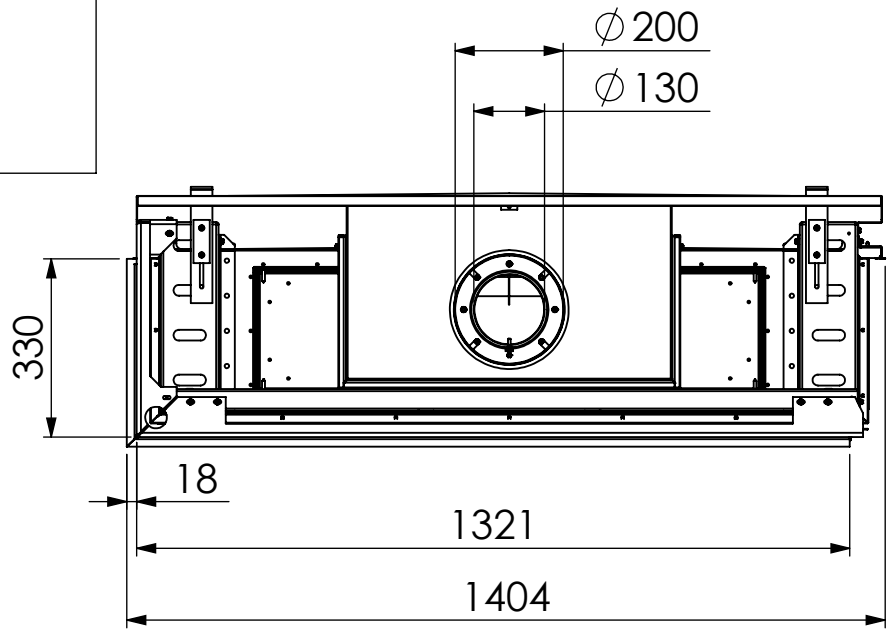

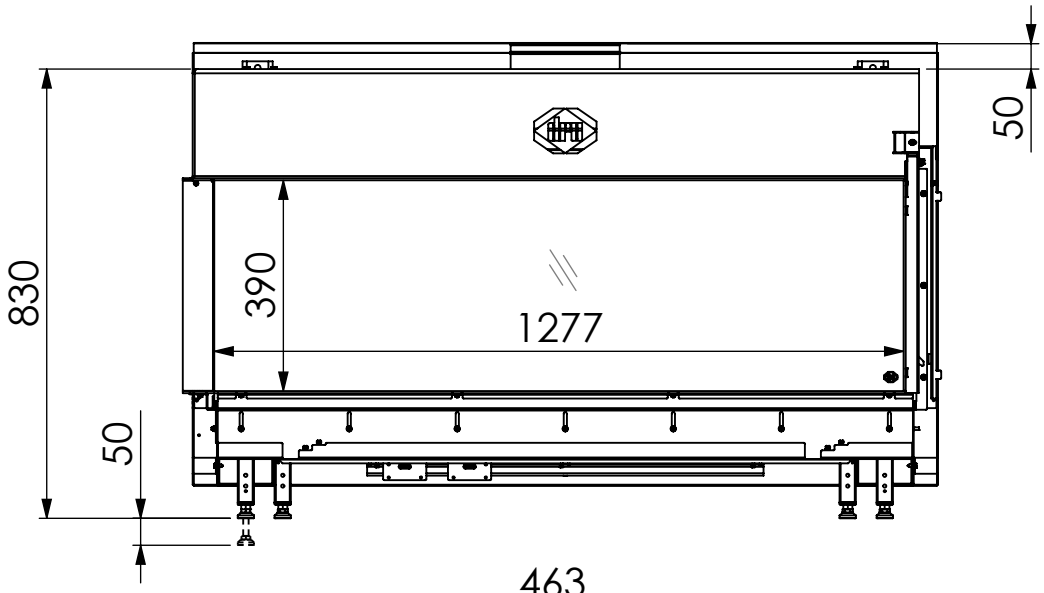

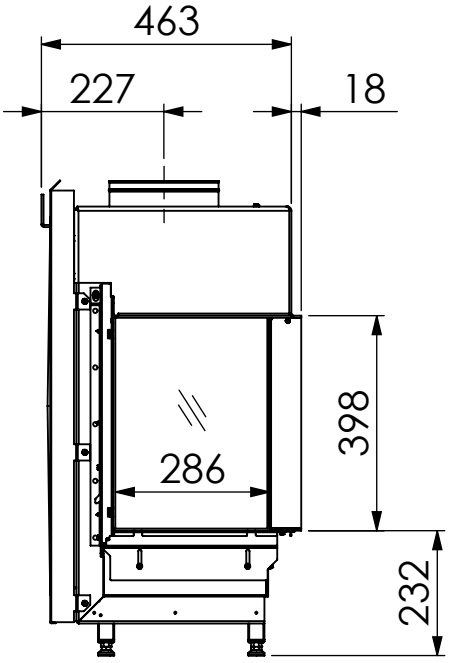

38C-2029/01

Metro 130XT/2 Links RCH

6S B=100 (64)

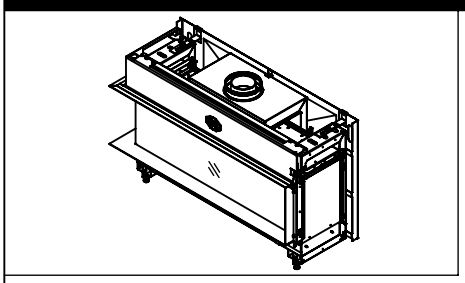

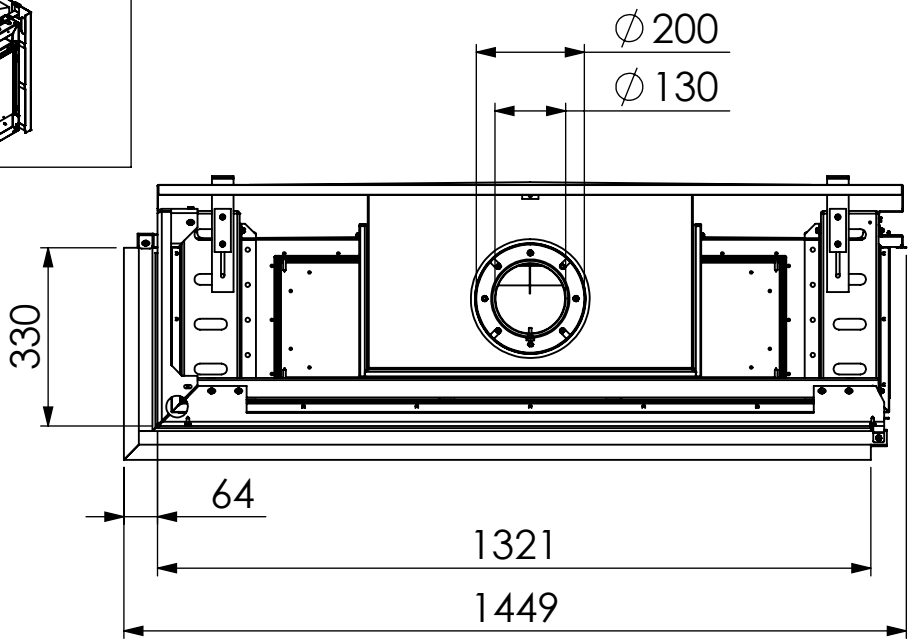

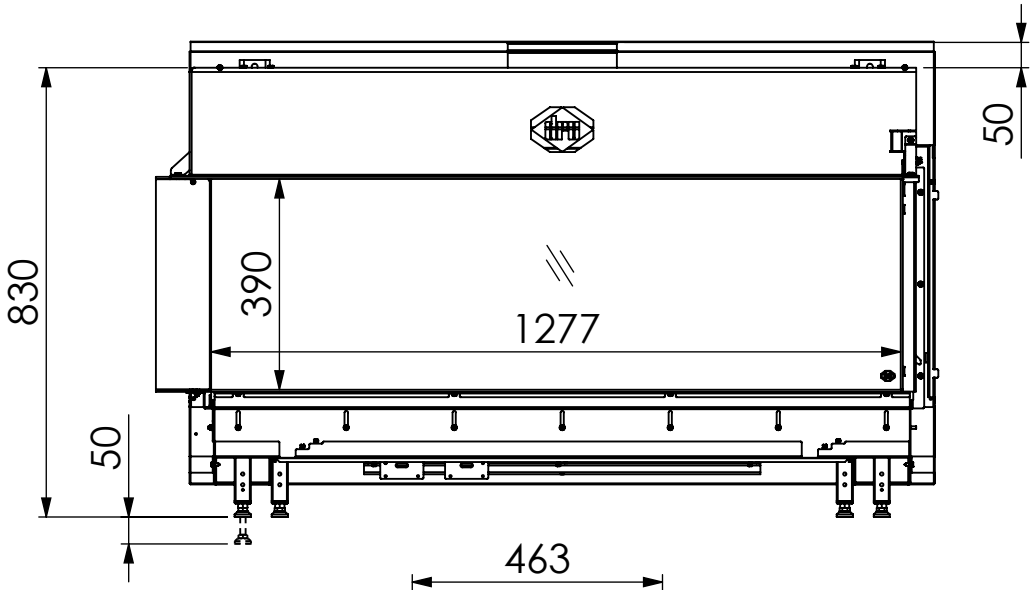

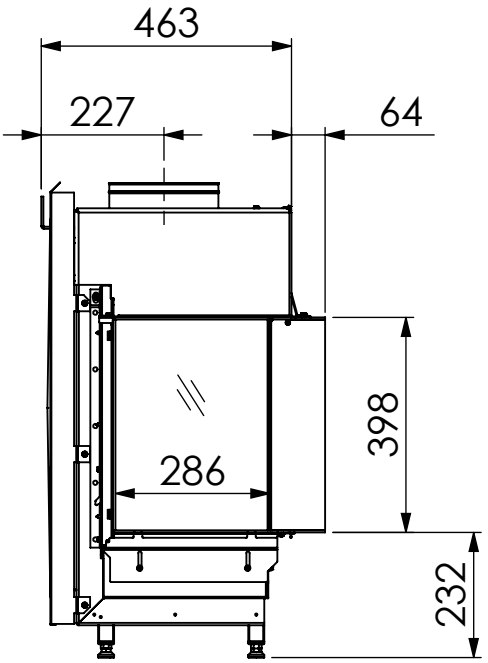

38C-2029/01

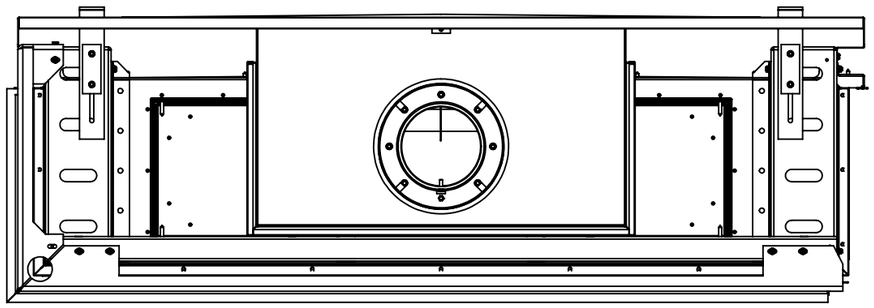

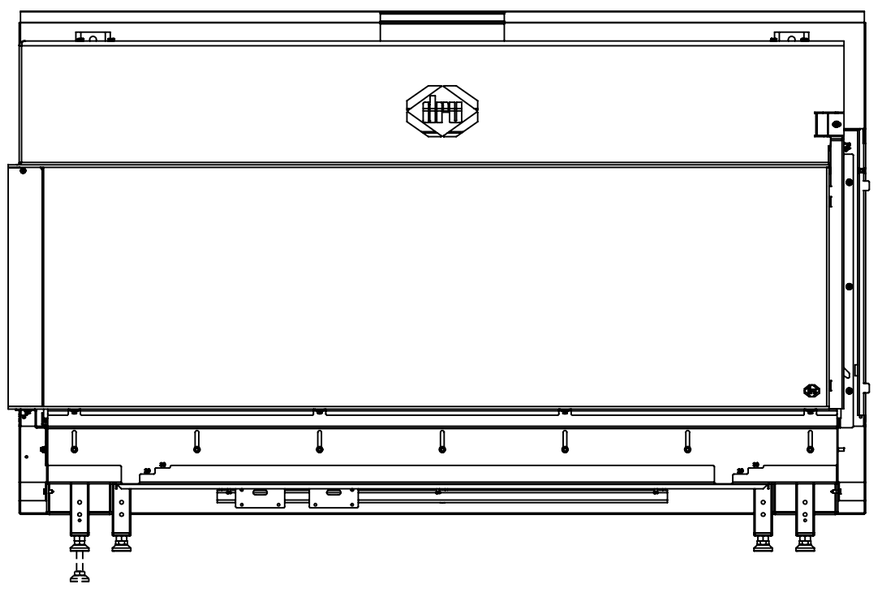

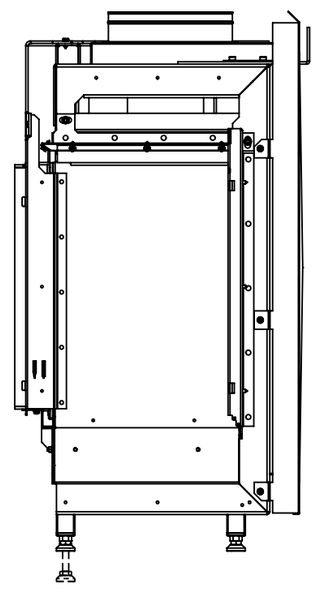

Sheet size: A3

Scale: 1:10